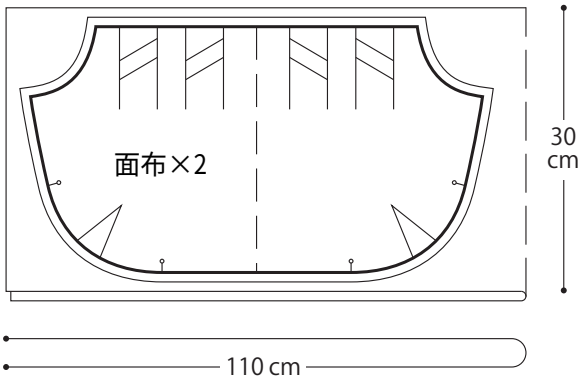

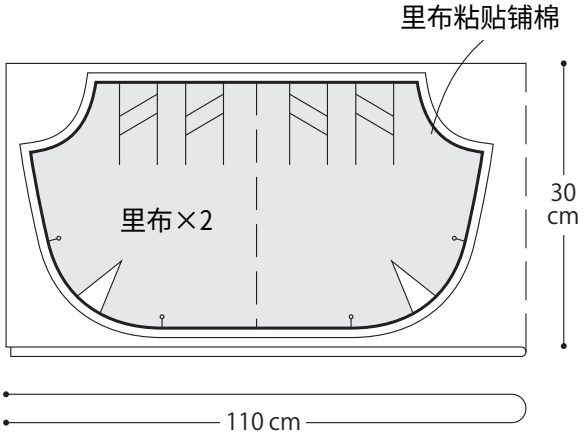

http://aijojo.taobao.com

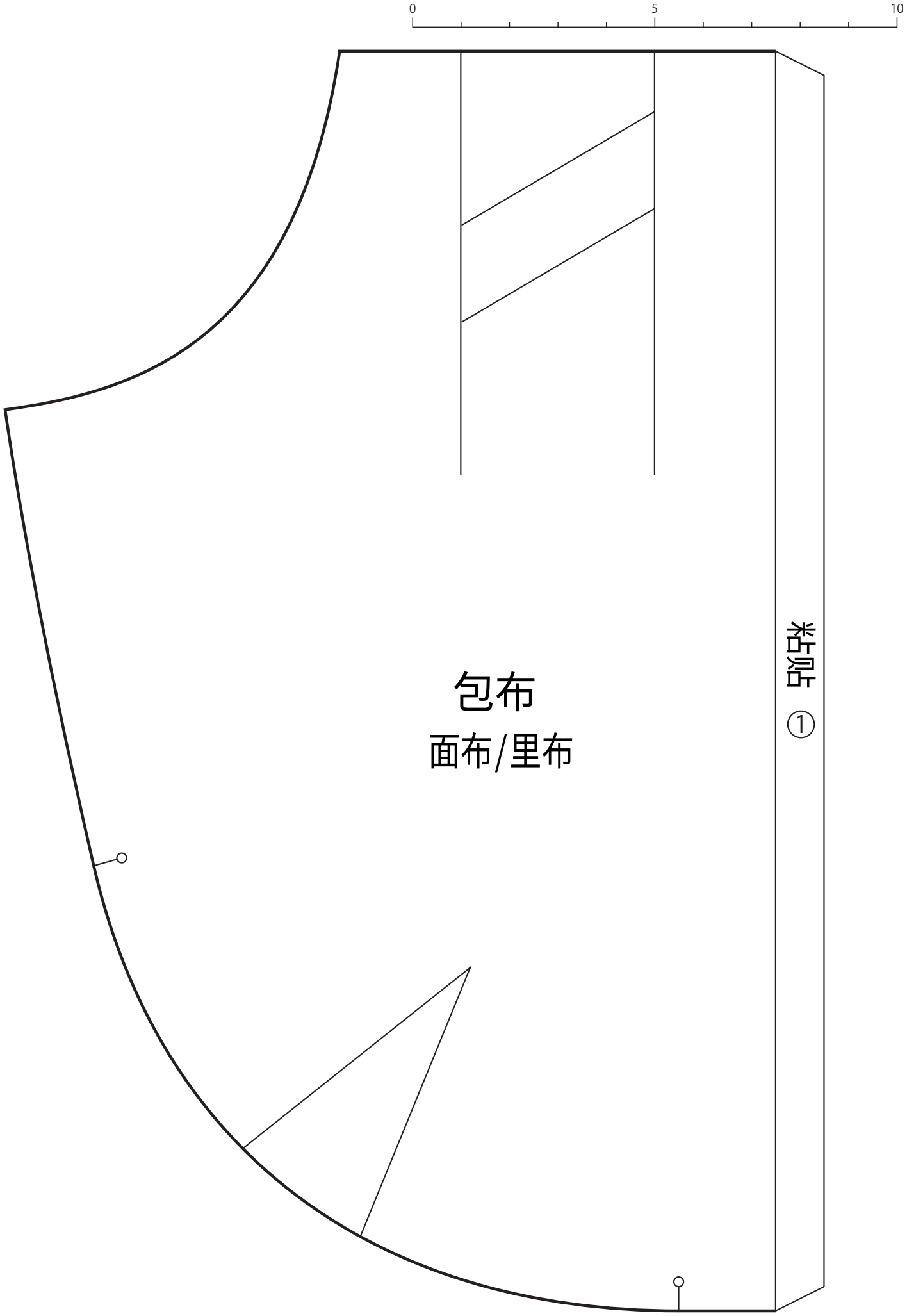

http://51nacs.taobao.com

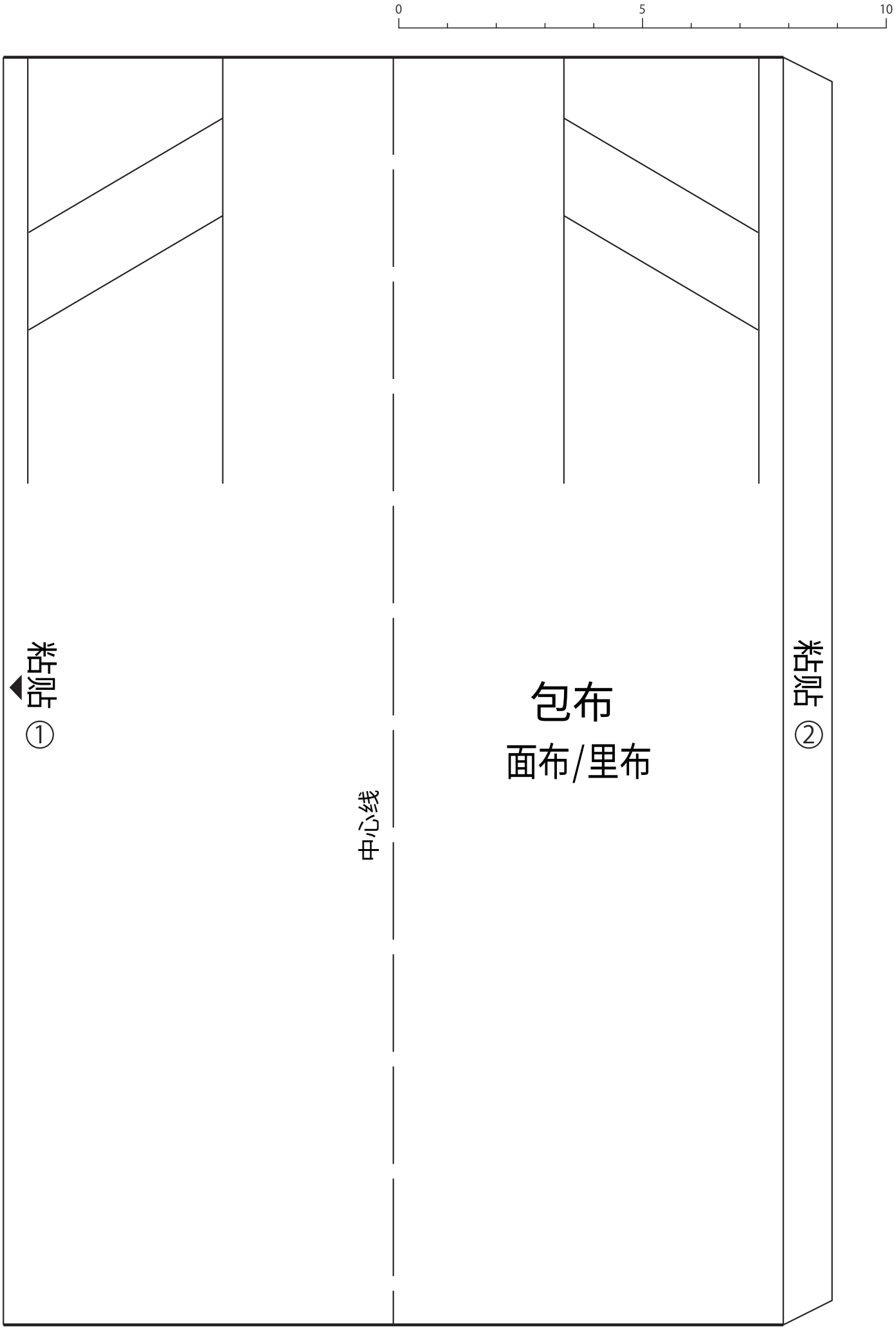

http://51nacs.taobao.com

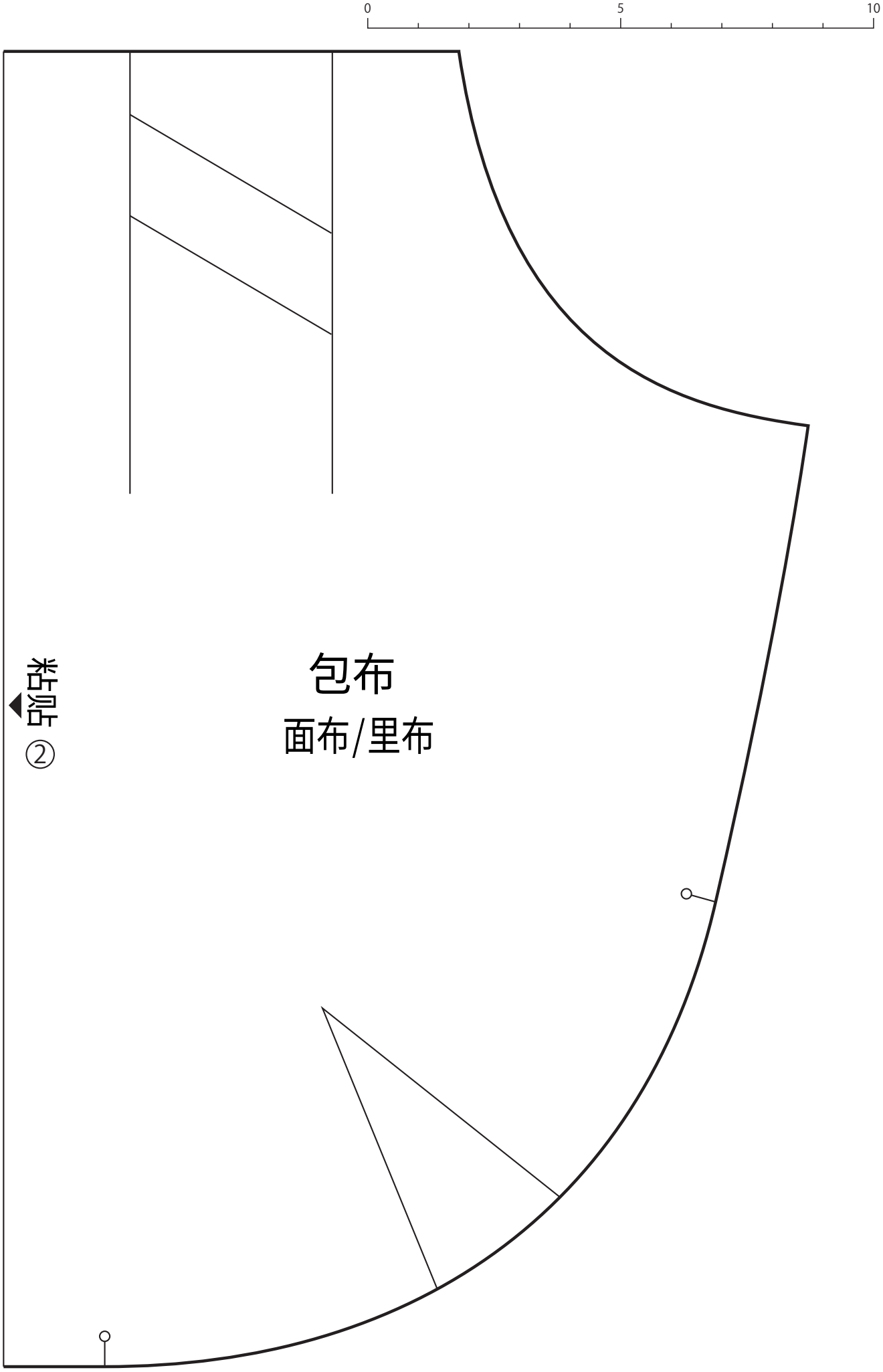

http://51nacs.taobao.com